Round 2 - Friday, April 1, 2022

SHOTLINK

Club Car Championship at The Landings Club

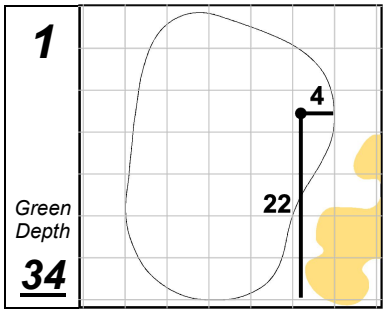

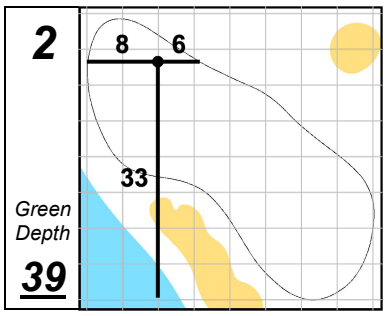

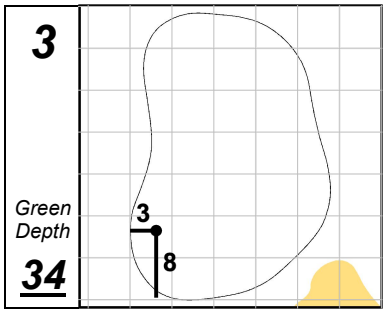

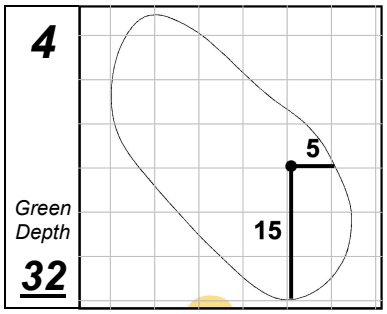

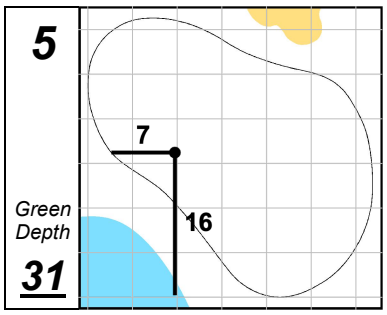

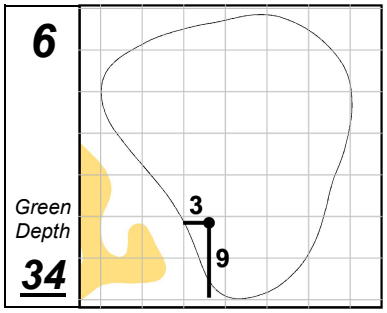

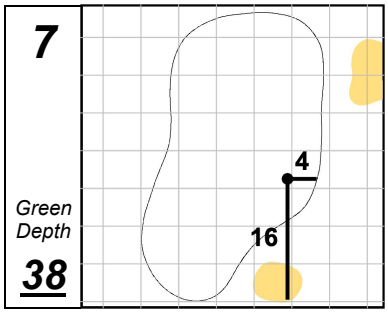

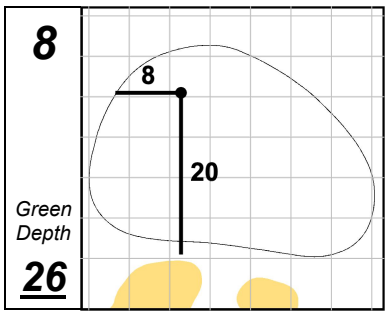

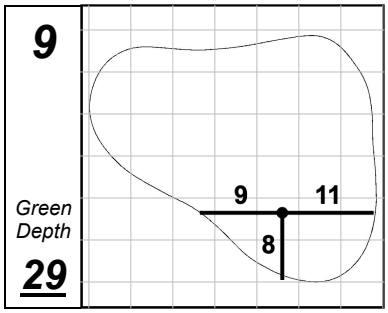

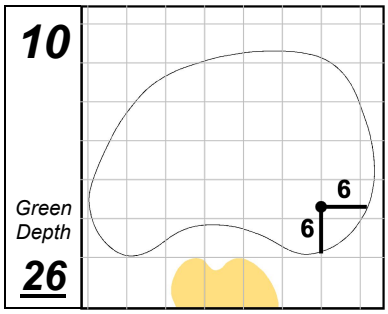

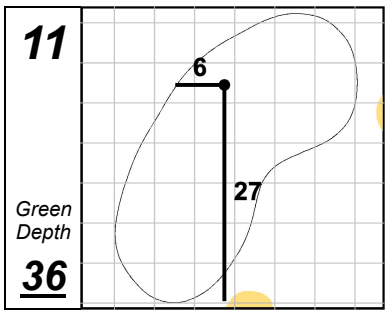

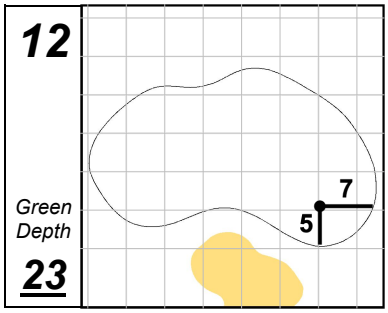

Landings Club - Deer Creek GC

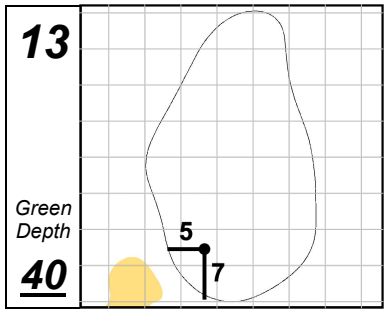

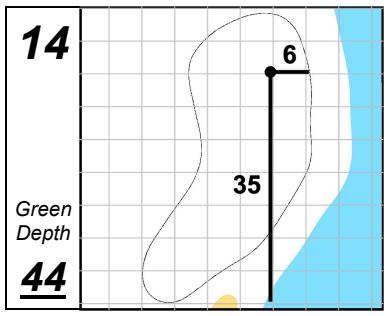

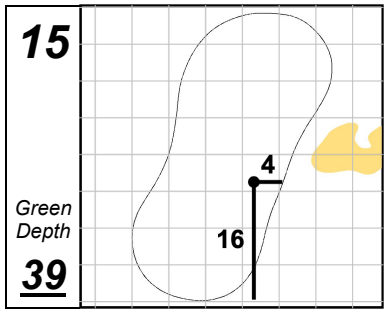

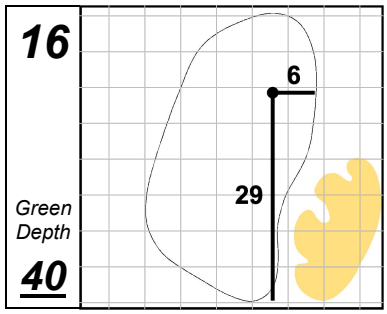

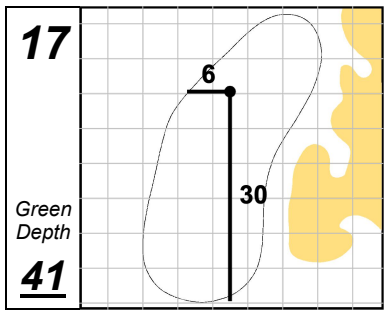

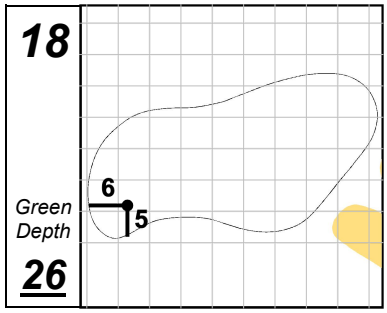

Each side of a complete square on the green represents 5 YARDS.

Thursday, March 31, 2022 12:28:11 PM